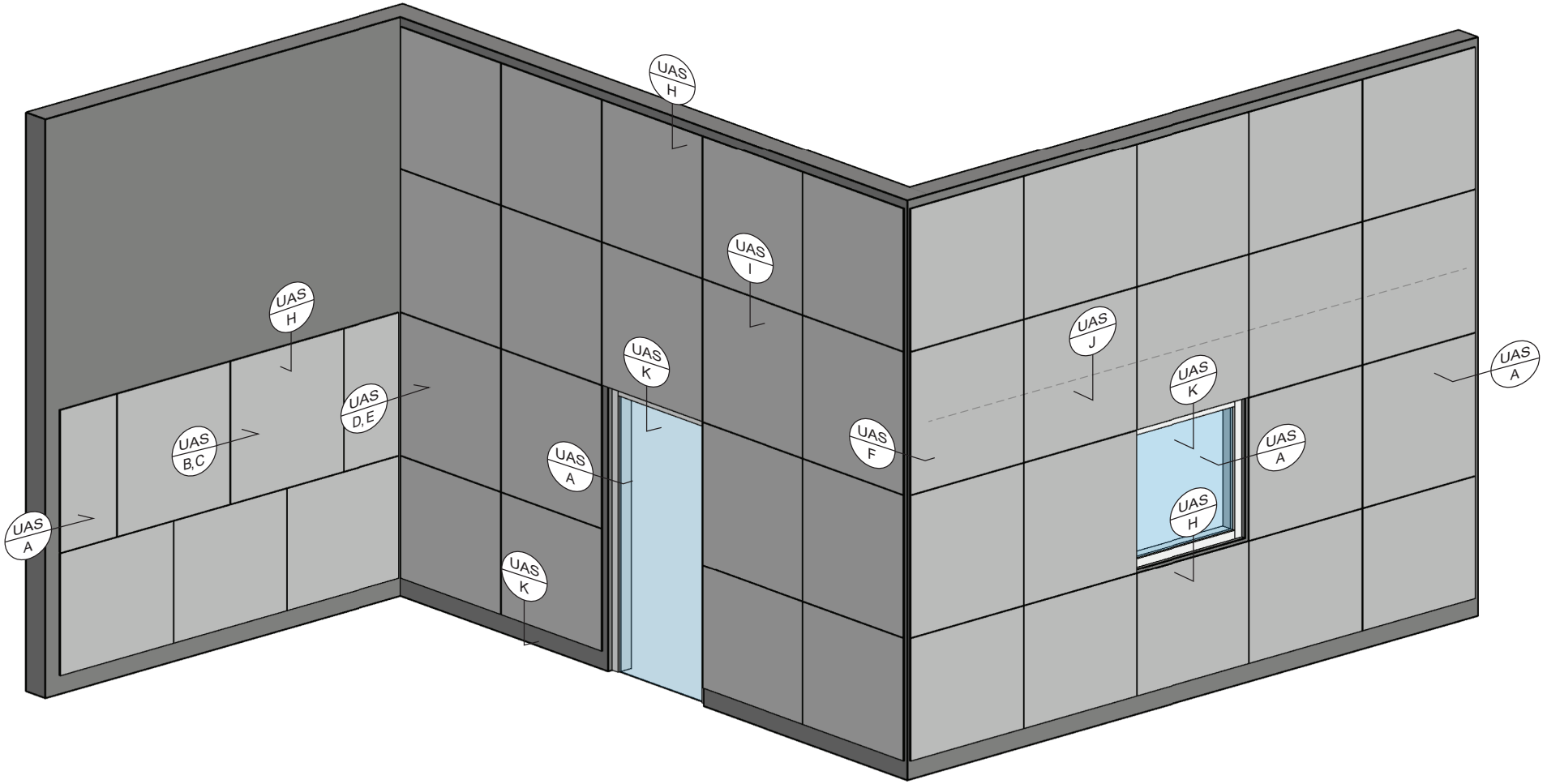

Title:		View:	Date:	
Installation Instruction 3-D Model		3D	07/12/17	
Detail:	System Type:	Scale:	Drawn By:	
0	3/4” Universal Architectural System	N/A	WPS, Inc.	

Wall Panel System, Inc.
Tel: 877-333-4WPS
support@wallpanelsystems.net
Web: www.wallpanelsystems.net
© 2012 Wall Panel Systems Inc.

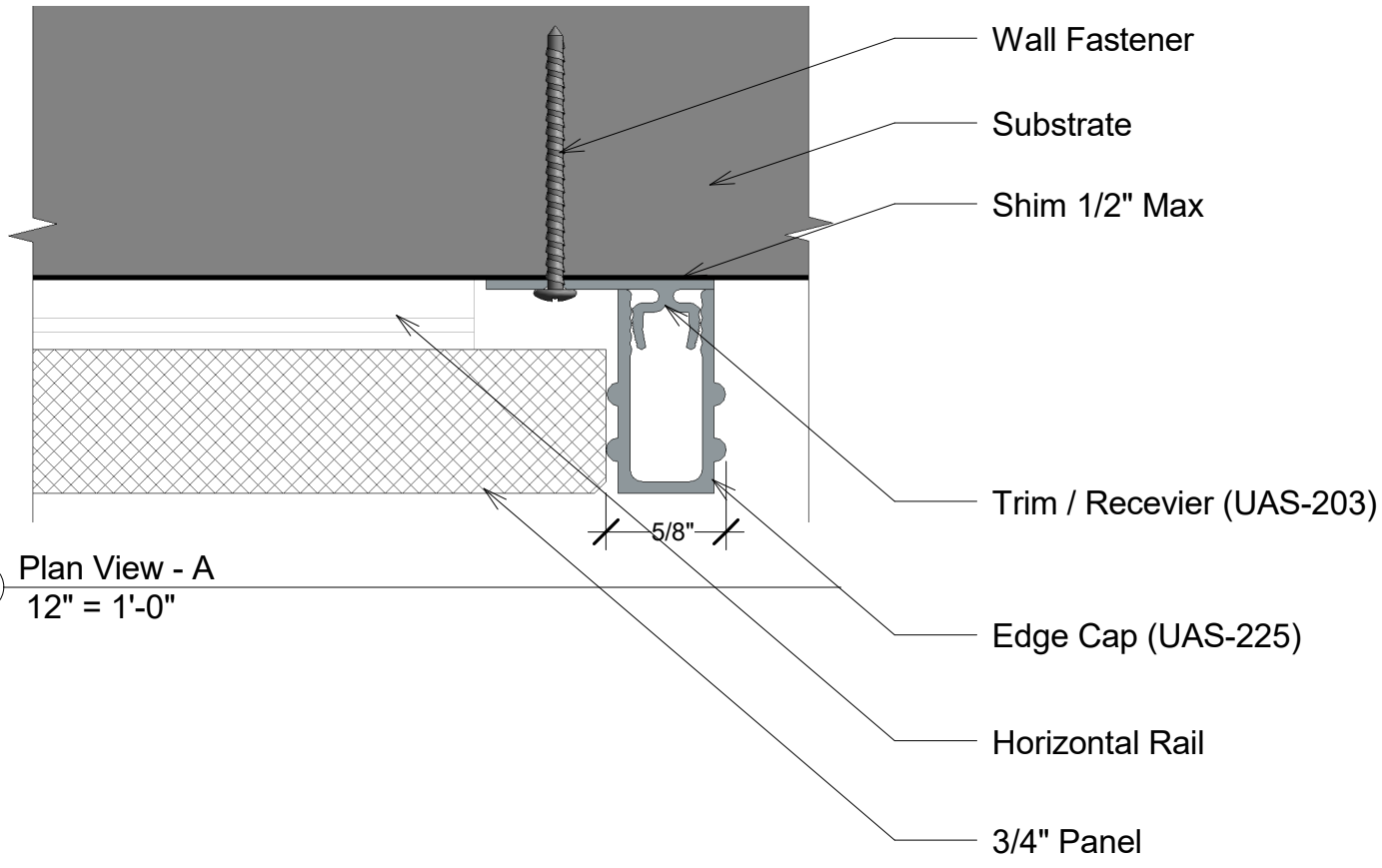

1 Plan View - A
12" = 1'-0"

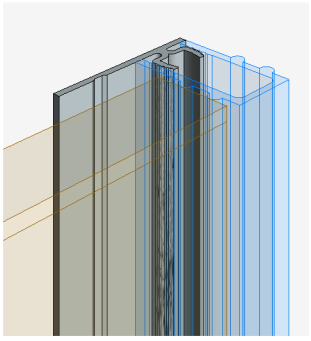

2 UAS-203 (A)
Trim / Recevier

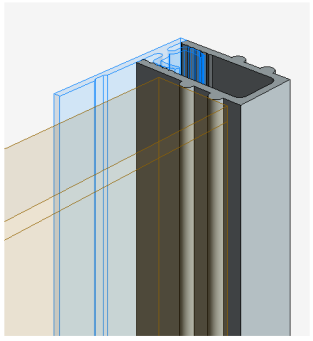

3 UAS-225 (A)
Edge Cap

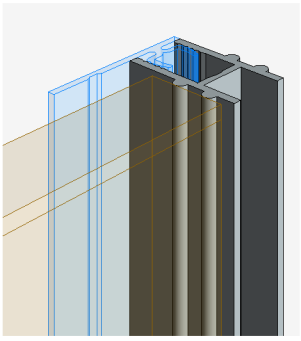

4 UAS-226 (A)
Option Edge Cap

Title:		View:	Date:	
Vertical Edge		Full	07/12/17	
Detail:	System Type:	Scale:	Draw By:	
A	3/4" Universal Architectural Sys.	Full	WPS, Inc.	

Wall Panel Systems, Inc.
Tel: 877-333-4WPS
support@wallpanelsystems.net
Web: www.wallpanelsystems.net
© 2012 Wall Panel Systems Inc.

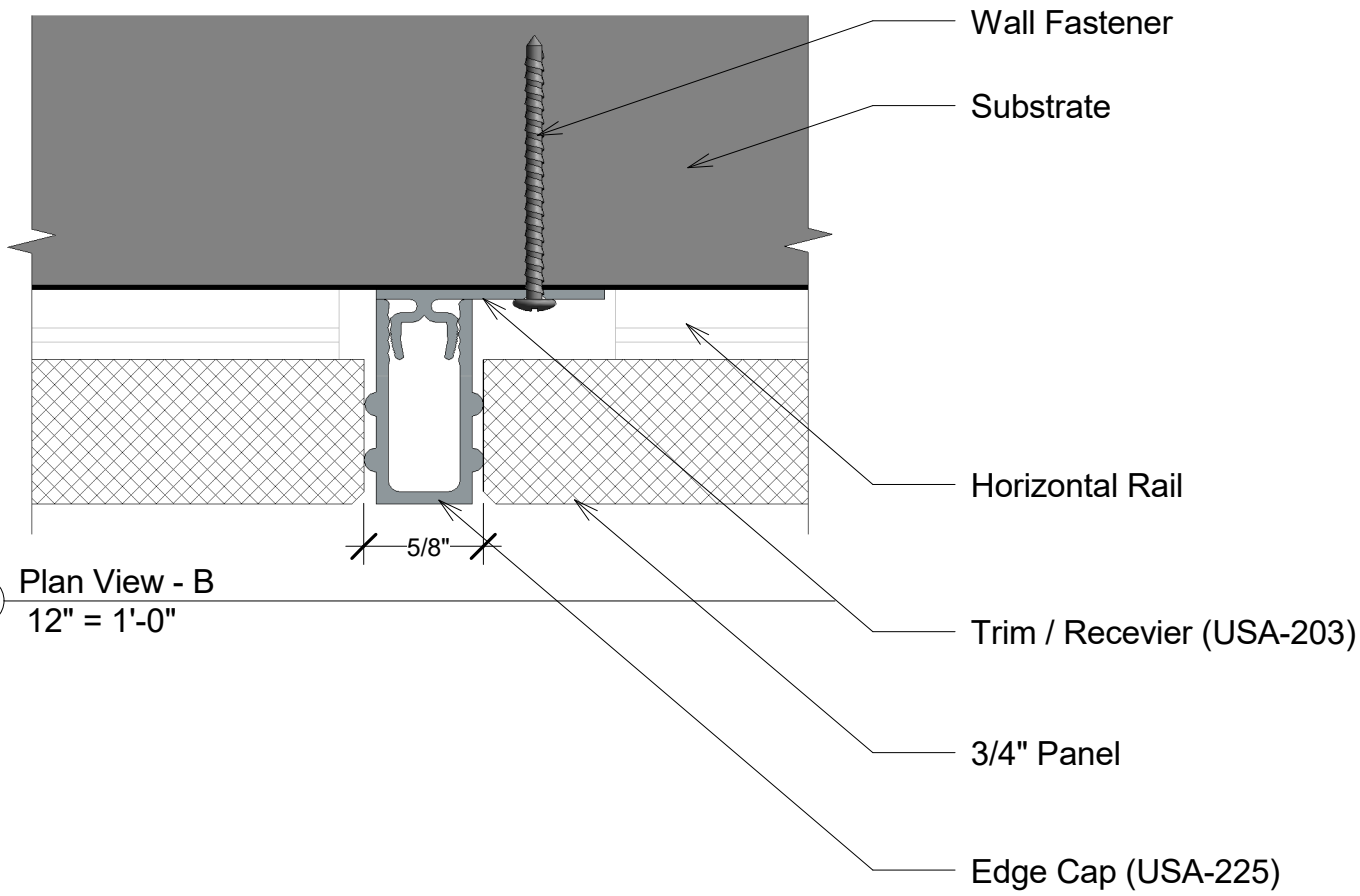

1 Plan View - B
12" = 1'-0"

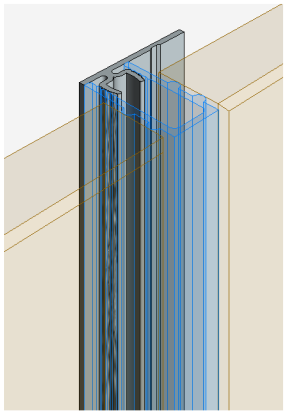

2 UAS-203 (B)
Trim / Recevier

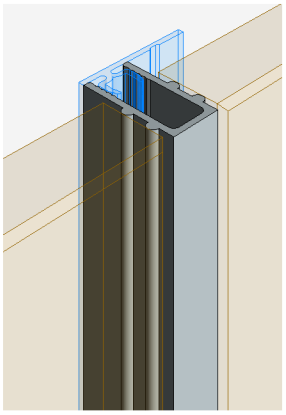

3 UAS-225 (B)
Edge Cap

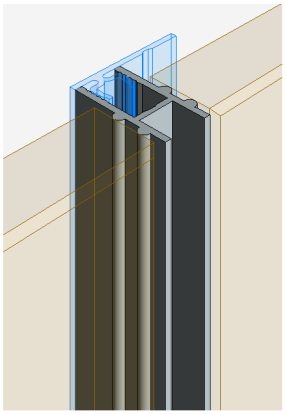

4 UAS-226 (B)
Option Edge Cap

Title:		View:	Date:	
Vertical Joint Trim		Plan	07/12/17	
Detail:	System Type:	Scale:	Draw By:	
B	3/4" Universal Architectural Sys.	Full	WPS, Inc.	

Wall Panel Systems, Inc.
Tel: 877-333-4WPS
support@wallpanelsystems.net
Web: www.wallpanelsystems.net
© 2012 Wall Panel Systems Inc.

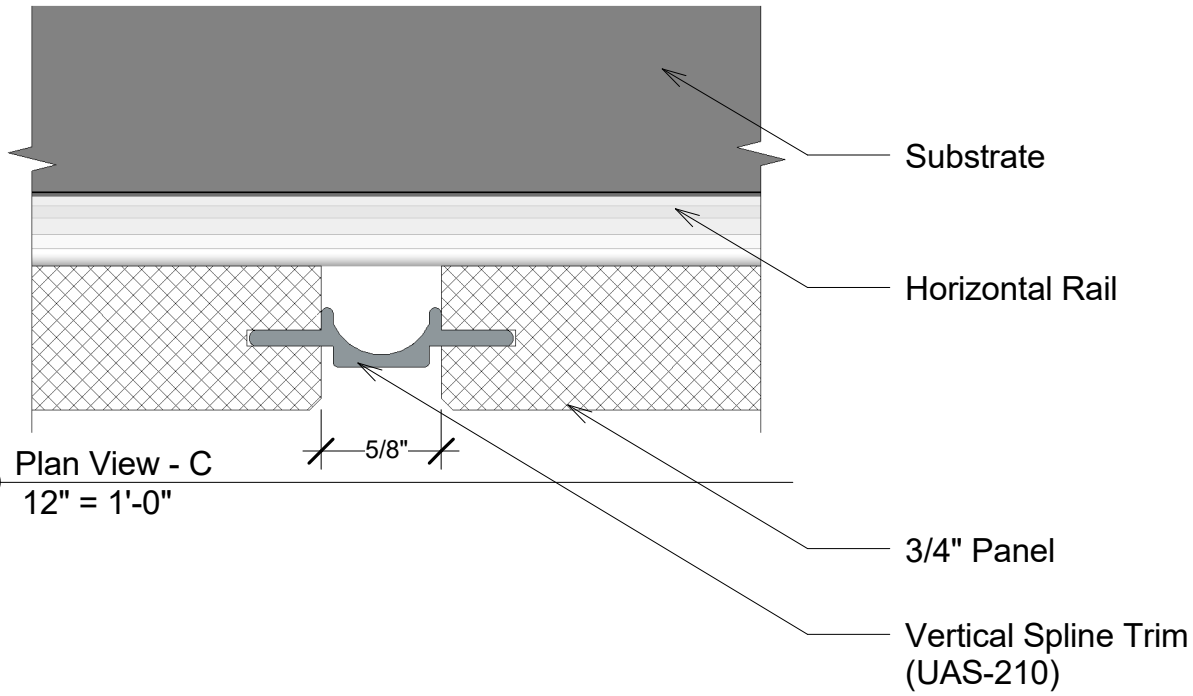

1 Plan View - C
12" = 1'-0"

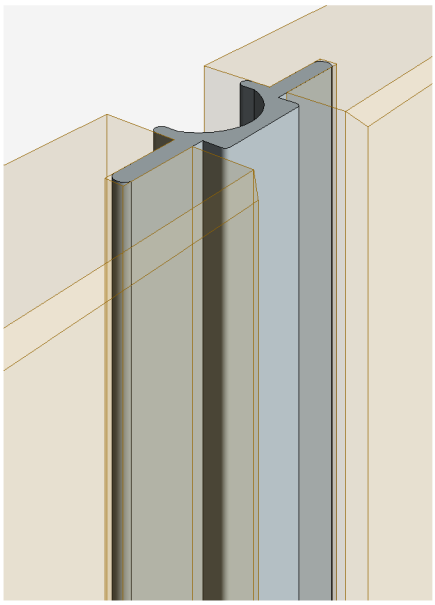

2 UAS-210 (C)
Vertical Trim

Title:		View:	Date:	
Vertical Spline Trim		Plan	07/12/17	
Detail:	System Type:	Scale:	Draw By:	
C	3/4" Universal Architectural Sys.	Full	WPS, Inc.	

Wall Panel Systems, Inc.
Tel: 877-333-4WPS
support@wallpanelsystems.net
Web: www.wallpanelsystems.net
© 2012 Wall Panel Systems Inc.

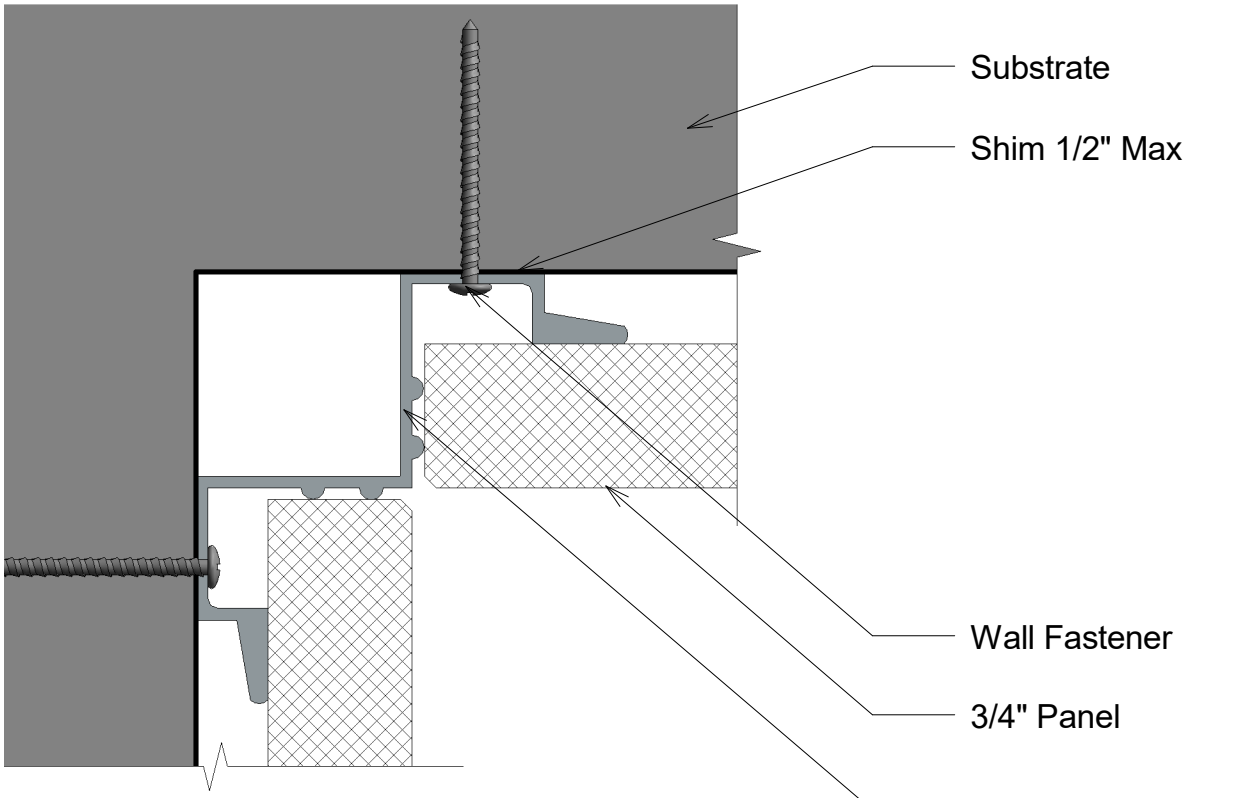

1 Plan View - D
12" = 1'-0"

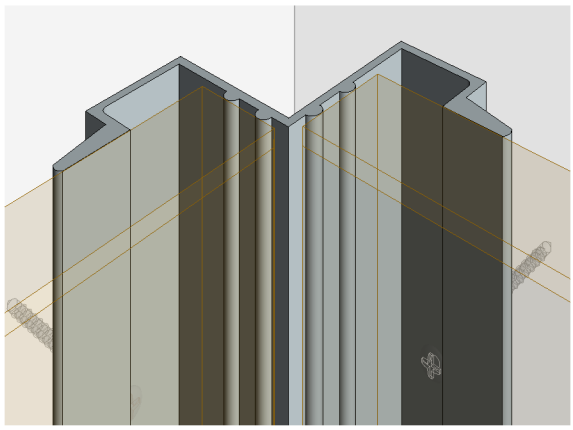

2 SHA-440 (D)
Inside Corner Trim

Title:		View:	Date:	
Inside Corner		Plan	07/12/17	
Detail:	System Type:	Scale:	Draw By:	
D	3/4" Universal Architectural Sys.	Full	WPS, Inc.	

Wall Panel Systems, Inc.
Tel: 877-333-4WPS
support@wallpanelsystems.net
Web: www.wallpanelsystems.net
© 2012 Wall Panel Systems Inc.

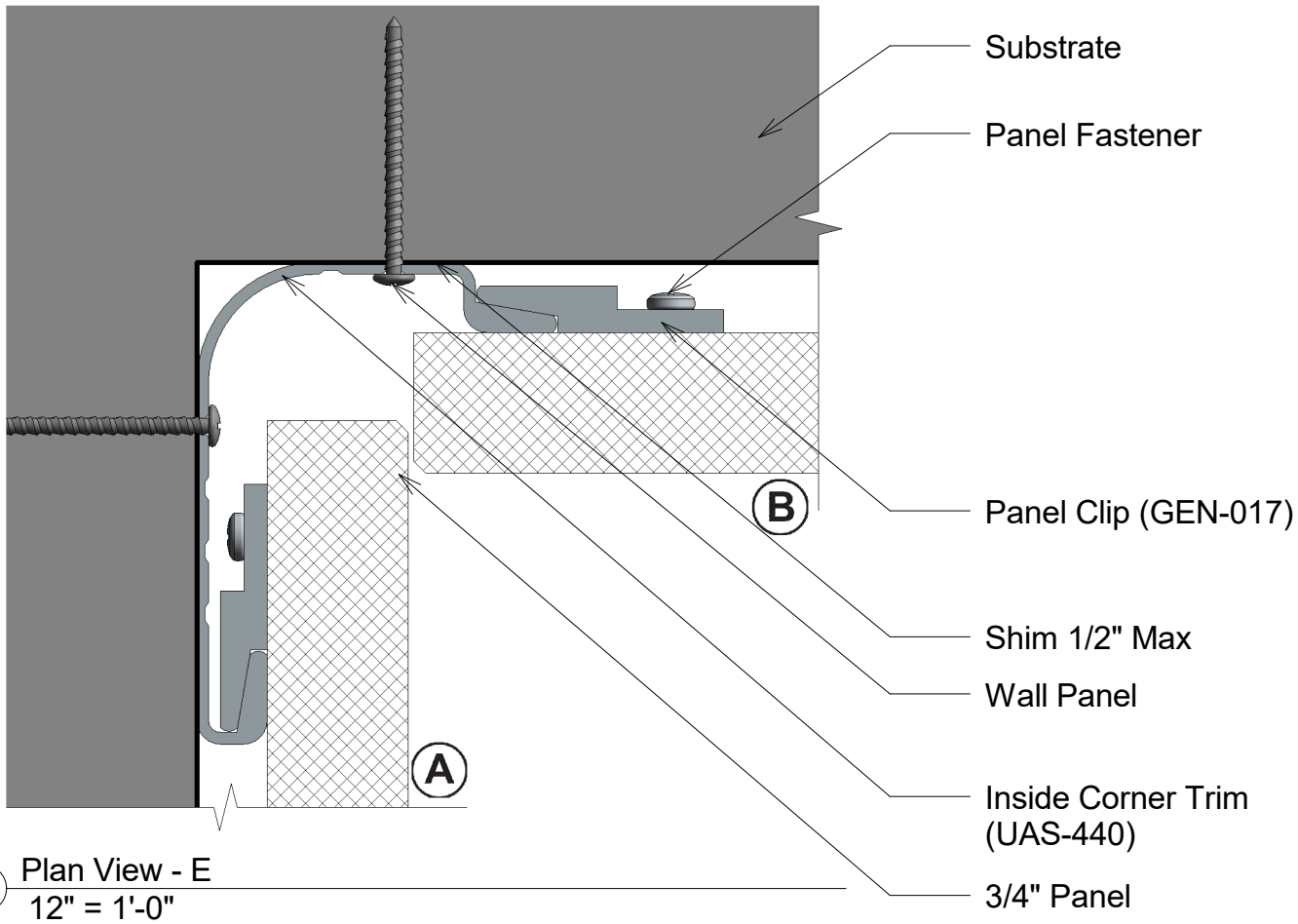

1 Plan View - E
12" = 1'-0"

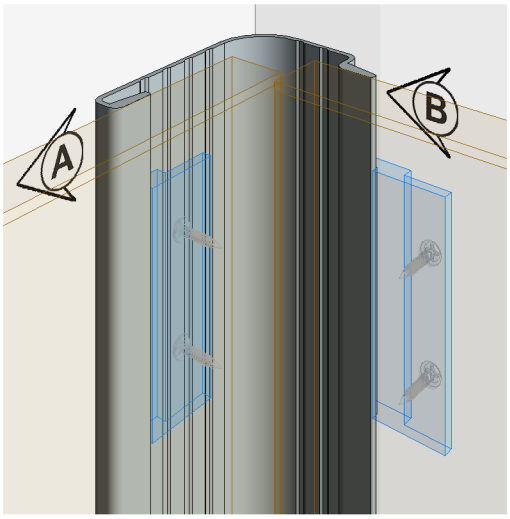

2 UAS-240 (E)
Inside Corner Trim

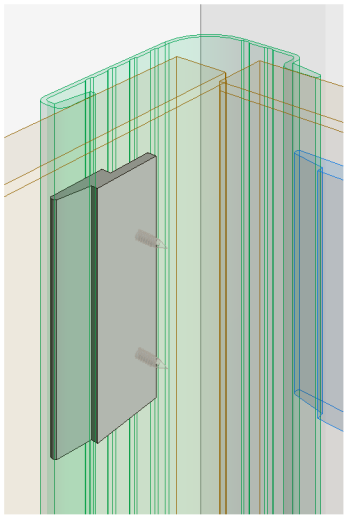

3 GEN-017 (E)
Panel Clip

Panel A must be installed before panel B.

Title:		View:	Date:	
Inside Corner @ Soffit		Plan	07/12/17	
Detail:	System Type:	Scale:	Draw By:	
E	3/4" Universal Architectural Sys.	Full	WPS, Inc.	

Wall Panel Systems, Inc.
Tel: 877-333-4WPS
support@wallpanelsystems.net
Web: www.wallpanelsystems.net
© 2012 Wall Panel Systems Inc.

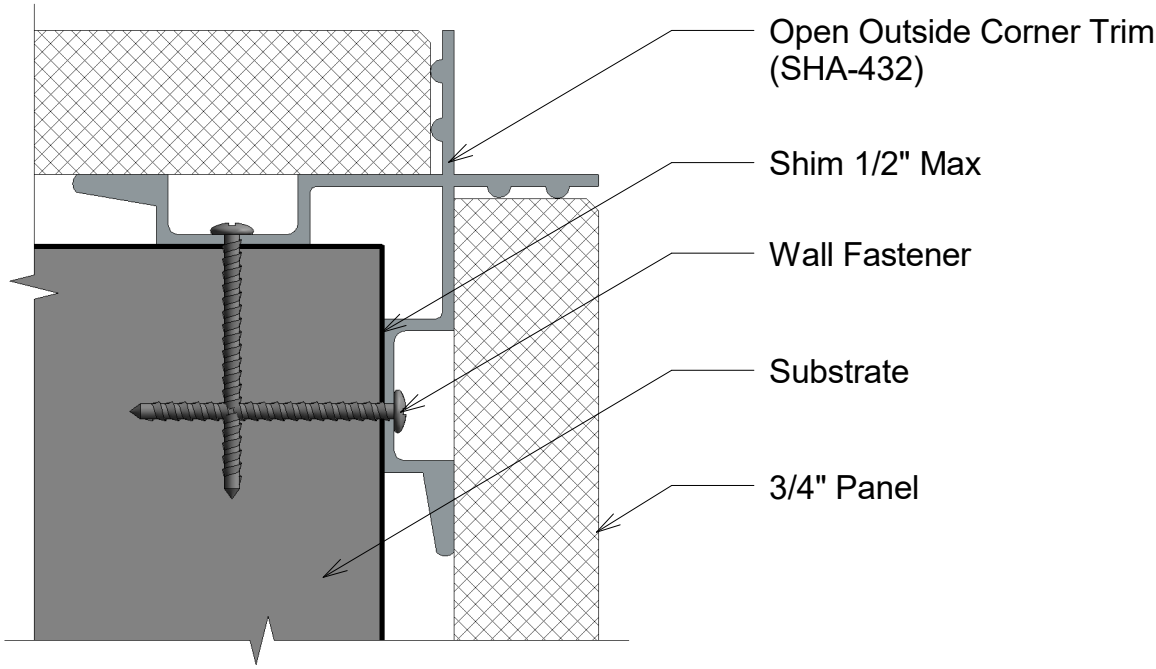

1 Plan View - F
12" = 1'-0"

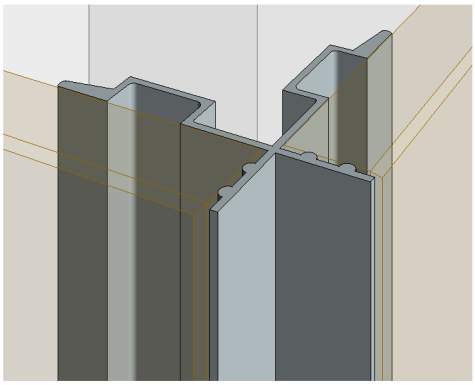

2 SHA-432 (F)
Open Outside Corner Trim

Title:		View:	Date:	
Outside Corner		Plan	0712/17	
Detail:	System Type:	Scale:	Draw By:	
F	3/4" Universal Architectural Sys.	Full	WPS, Inc.	

Wall Panel Systems, Inc.
Tel: 877-333-4WPS
support@wallpanelsystems.net
Web: www.wallpanelsystems.net
© 2012 Wall Panel Systems Inc.

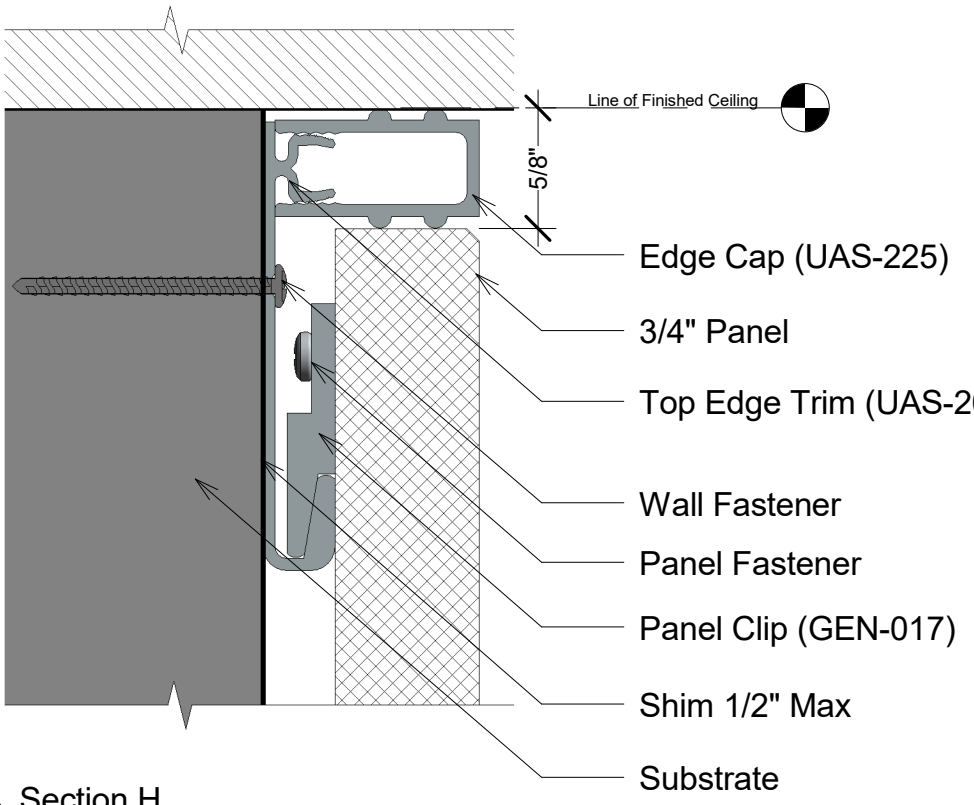

1 Section H
12" = 1'-0"

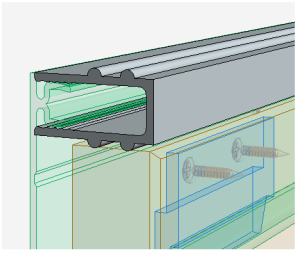

4 UAS-225 (H)
Edge Cap

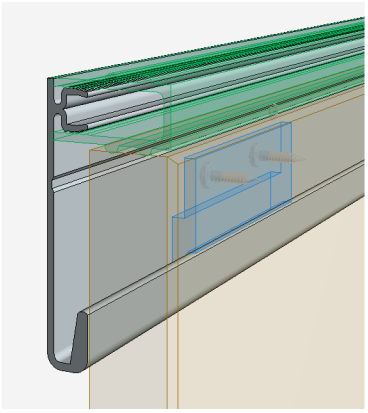

2 UAS-202 (H)
Top Edge Trim

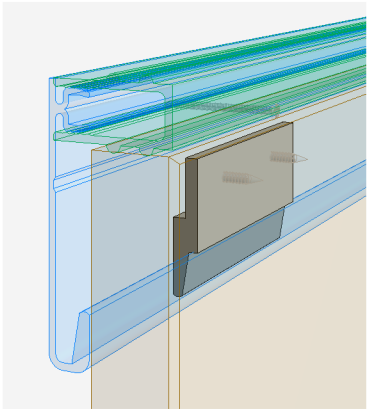

3 GEN-017 (H)
Panel Clip

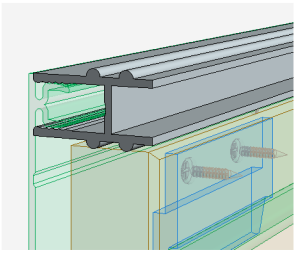

5 UAS-226 (H)
Option Edge Cap

Title:		View:	Date:	
Top Edge / Head Termination		Section	07/12/17	
Detail:	System Type:	Scale:	Draw By:	
H	3/4" Universal Architectural Sys.	Full	WPS, Inc.	

Wall Panel Systems, Inc.
Tel: 877-333-4WPS
support@wallpanelsystems.net
Web: www.wallpanelsystems.net
© 2012 Wall Panel Systems Inc.

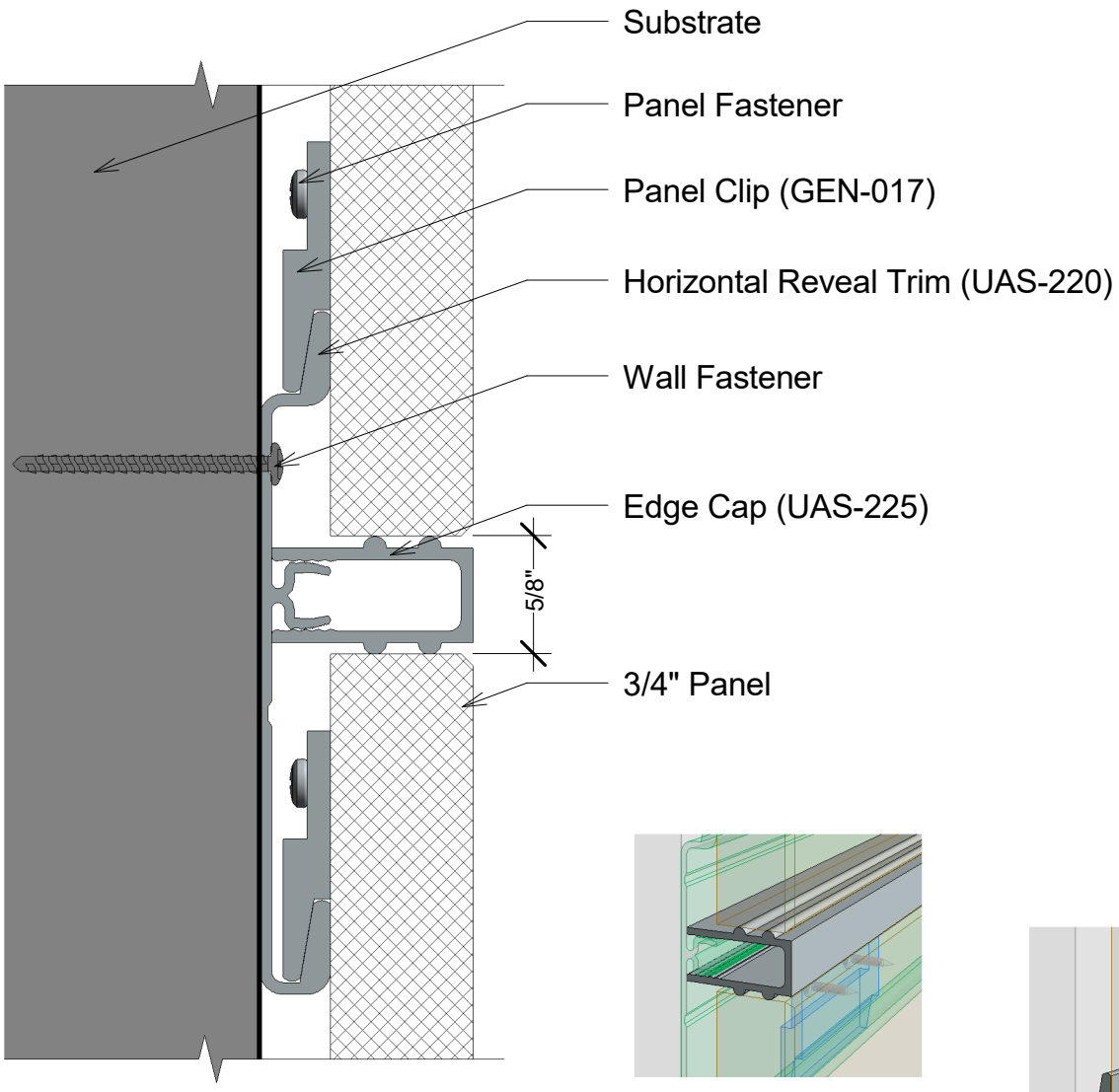

1 Section I
12" = 1'-0"

3 UAS-225 (I)
Edge Cap

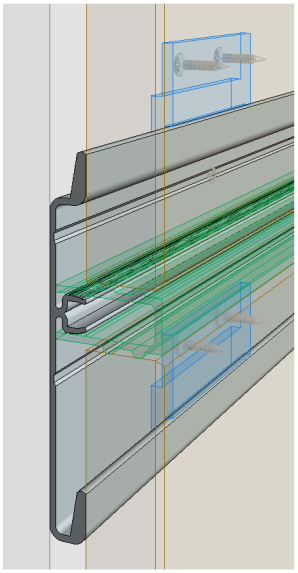

5 UAS-220 (I)
Horizontal Reveal Trim

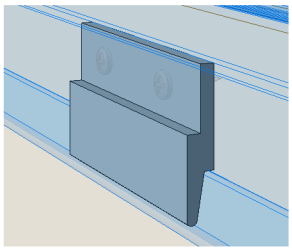

2 GEN-017 (I)
Panel Clip

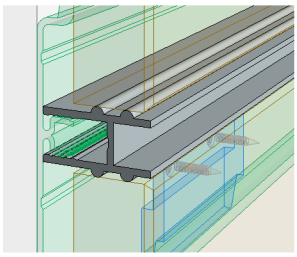

4 UAS-226 (I)
Option Edge Cap

Title:		View:	Date:	
Horizontal Reveal		Section	07/12/17	
Detail:	System Type:	Scale:	Draw By:	
I	3/4" Universal Architectural Sys.	Full	WPS, Inc.	

Wall Panel Systems, Inc.
Tel: 877-333-4WPS
support@wallpanelsystems.net
Web: www.wallpanelsystems.net
© 2012 Wall Panel Systems Inc.

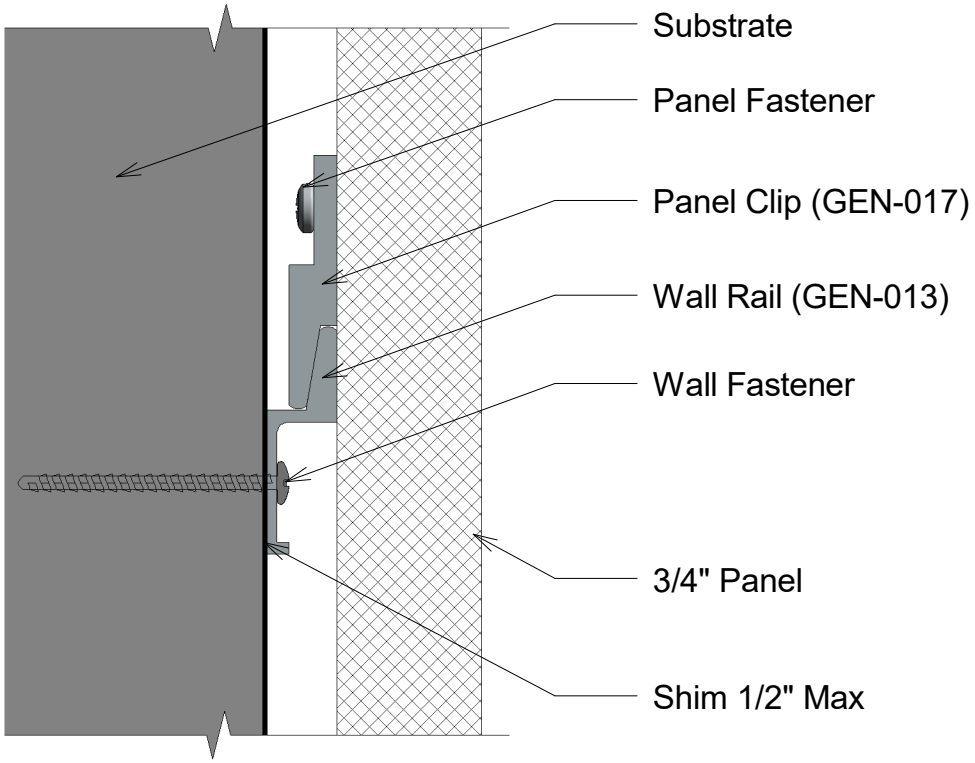

1 Section J
12" = 1'-0"

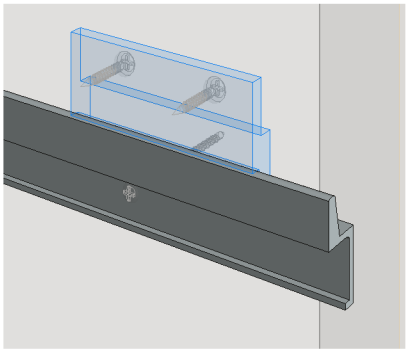

2 GEN-013 (J)
Wal Rail

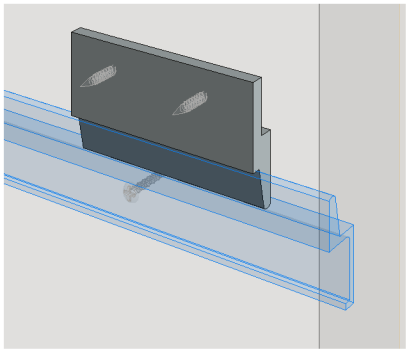

3 GEN-017 (J)
Panel Clip

Title:		View:	Date:	
Mid-Wall Rail / Clip		Section	07/12/17	Wall Panel Systems, Inc.
Detail:	System Type:	Scale:	Draw By:	Tel: 877-333-4WPS support@wallpanelsystems.net Web: www.wallpanelsystems.net
J	3/4" Universal Architectural Sys.	Full	WPS, Inc.	© 2012 Wall Panel Systems Inc.

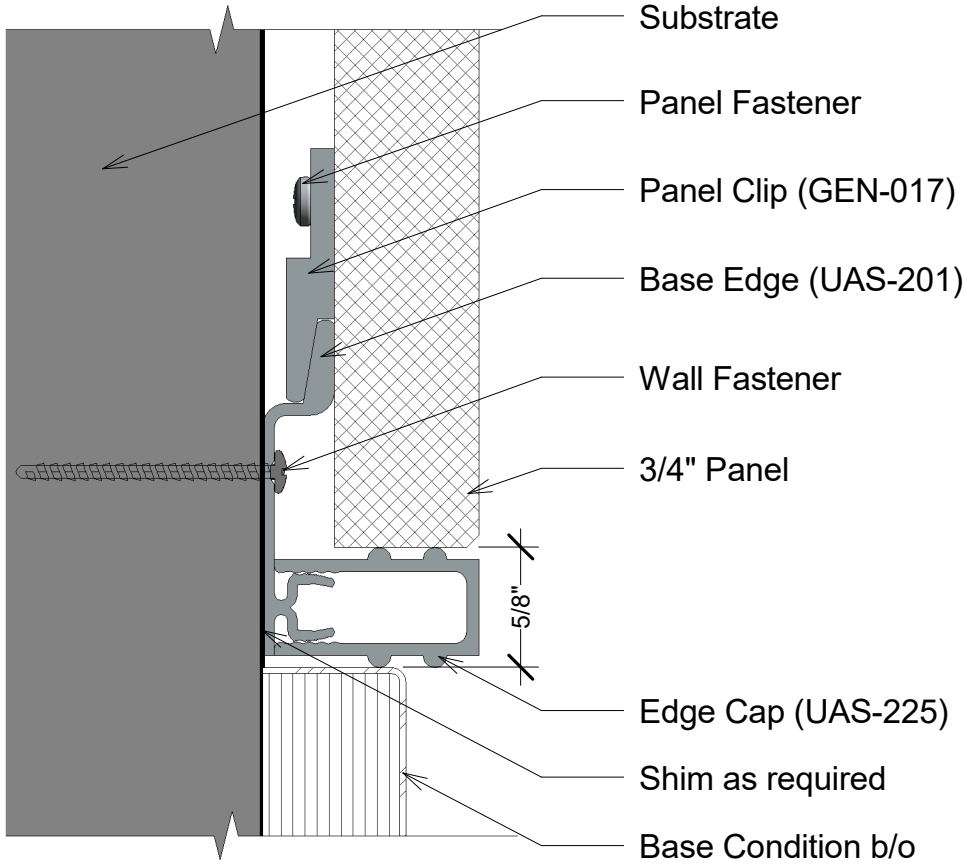

1 Section K
12" = 1'-0"

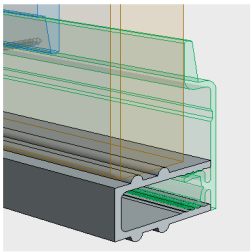

4 UAS-225 (K)
Edge Cap

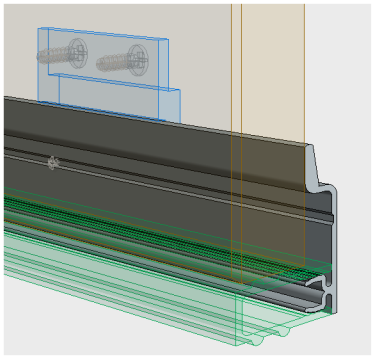

2 UAS-201 (K)
Base Edge

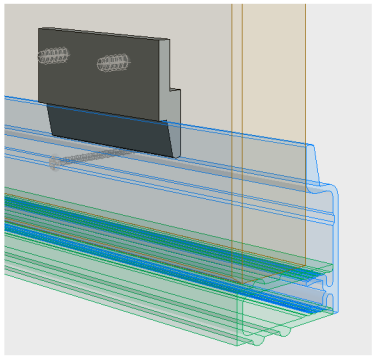

3 GEN-017 (K)
Panel Clip

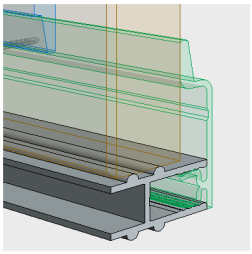

5 UAS-226 (K)
Option Edge Cap

Title:		View:	Date:	
Base Edge / Panel Termination		Section	07/12/17	Wall Panel Systems, Inc.
Detail:	System Type:	Scale:	Draw By:	Tel: 877-333-4WPS support@wallpanelsystems.net Web: www.wallpanelsystems.net
K	3/4" Universal Architectural Sys.	Full	WPS, Inc.	© 2012 Wall Panel Systems Inc.

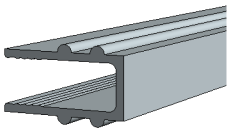

1 UAS-225 (U)
Edge Cap

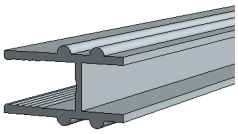

2 UAS-226 (U)
Option Edge Cap

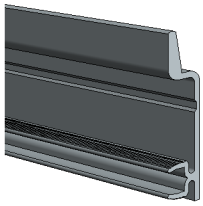

3 UAS-201 (U)
Base Edge

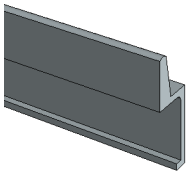

4 GEN-013 (U)
Wall Rail

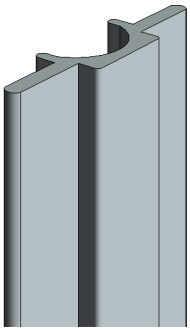

5 UAS-210 (U)
Vertical Trim

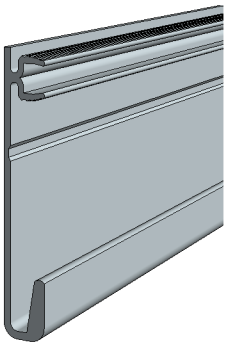

6 UAS-202 (U)
Top Edge Trim

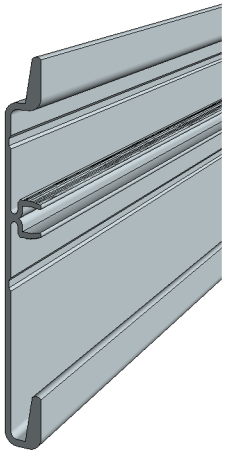

7 UAS-220 (U)
Horizontal Reveal

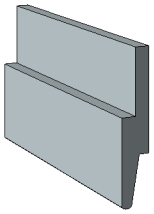

8 GEN-017 (U)
Panel Clip

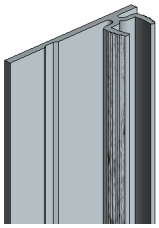

9 UAS-203 (U)
Trim / Recevier

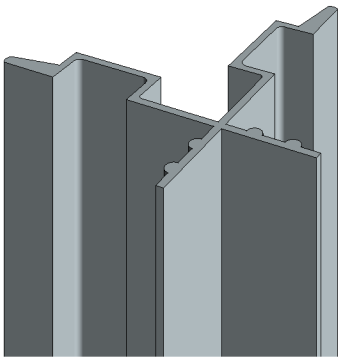

10 SHA-432 (U)
Open Outside Corner Trim

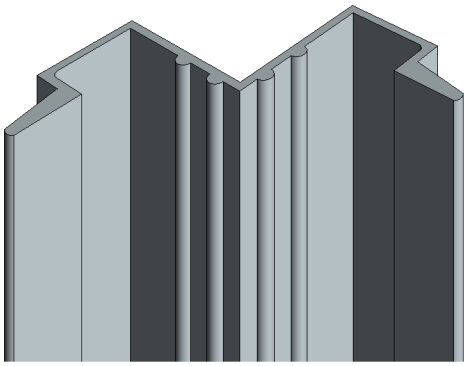

11 SHA-440 (U)
Inside Corner Trim

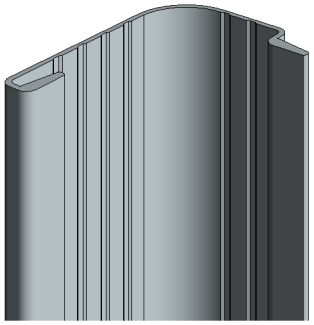

12 UAS-240 (U)
Inside Corner Trim

Title:		View:	Date:	
Parts List		3D	07/12/17	
Detail:	System Type:	Scale:	Draw By:	
U	3/4" Universal Architectural Sys.	N/A	WPS, Inc.	

Wall Panel Systems, Inc.
Tel: 877-333-4WPS
support@wallpanelsystems.net
Web: www.wallpanelsystems.net
© 2012 Wall Panel Systems Inc.